Angular contact ball bearing 7309 B KOYO

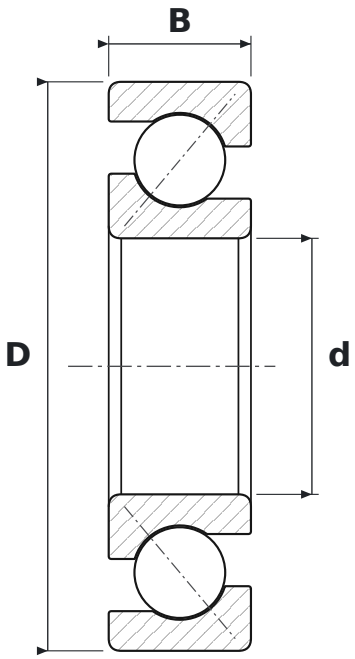

DIMENSIONS

d	bore diameter	**45 mm**
D	outside diameter	**100 mm**
B	width	**25 mm**

SPECIFICATIONS

Manufacturer	**KOYO**
Manufacturer designation	**7309 B**
Rolling elements	**single-row ball bearing**
B	**40° contact angle**
Seal	**open – no seals**
Radial internal clearance	**CN – normal**