CASTOMER

DATASHEET

Angular contact ball bearing 7309-B-MP FAG

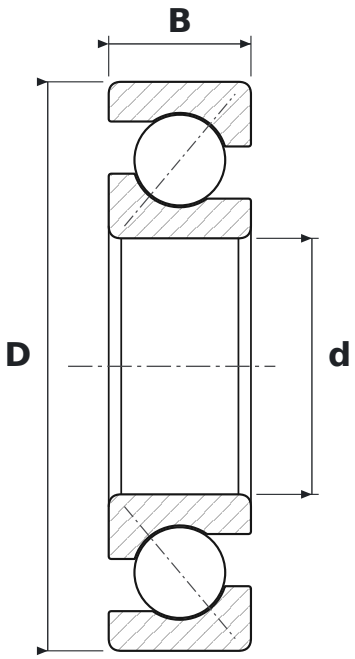

DIMENSIONS

d	bore diameter	**45 mm**
D	outside diameter	**100 mm**
B	width	**25 mm**

WHAT 7309-B-MP MEANS

B	40° contact angle
MP	koszyk mosiężny masywny

SPECIFICATIONS

Manufacturer	**FAG**
Manufacturer designation	**7309-B-MP**
Rolling elements	**single-row ball bearing**
Mass	**0.927 kg**