Angular contact ball bearing 7311 BECBTVP NKE

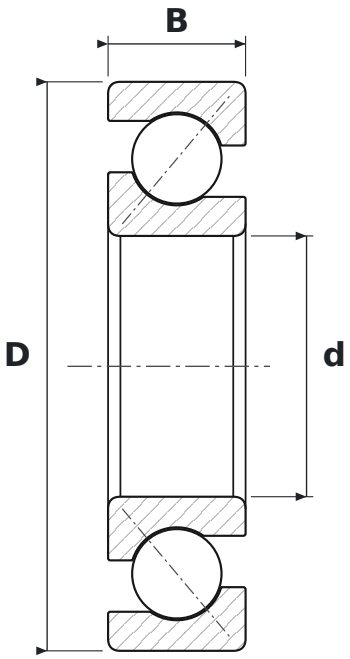

DIMENSIONS

d	bore diameter	**55 mm**
D	outside diameter	**120 mm**
B	width	**29 mm**

WHAT 7311 BECBTVP MEANS

BE	40° contact angle, reinforced design
CB	wykonanie uniwersalne do montażu parami – para ze średnim luzem osiowym
TVP	koszyk poliamidowy okienkowy

SPECIFICATIONS

Manufacturer	**NKE**
Manufacturer designation	**7311 BECBTVP**
Rolling elements	**single-row ball bearing**
Mass	**1.4 kg**