Angular contact ball bearing 7311-B-MP FAG

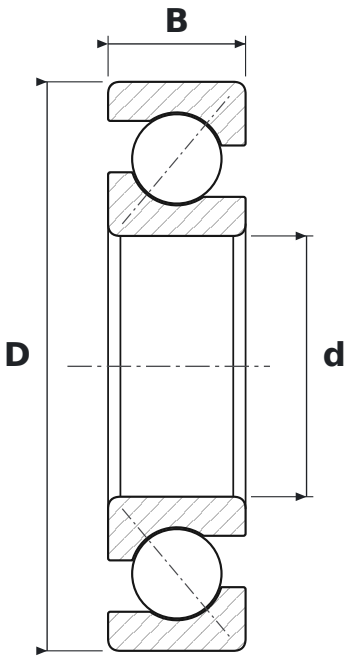

DIMENSIONS

d	bore diameter	**55 mm**
D	outside diameter	**120 mm**
B	width	**29 mm**

WHAT 7311-B-MP MEANS

B	40° contact angle
MP	koszyk mosiężny masywny

SPECIFICATIONS

Manufacturer	**FAG**
Manufacturer designation	**7311-B-MP**
Rolling elements	**single-row ball bearing**
Mass	**1.57 kg**