Ball screw support bearing BSF40115 DDUHP2B NSK

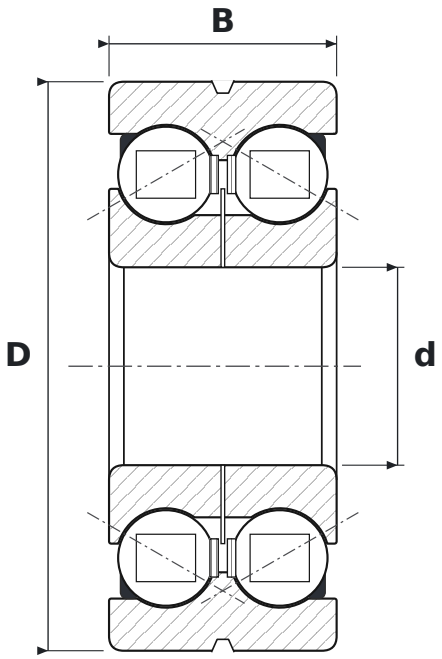

DIMENSIONS

d	bore diameter	**40 mm**
D	outside diameter	**115 mm**
B	width	**46 mm**

SPECIFICATIONS

Manufacturer	**NSK**
Manufacturer designation	**BSF40115 DDUHP2B**
Rolling elements	**double-row ball bearing**
Contact angle	**60°**
2RS	**contact rubber seals, both sides**
P2	**tolerance class P2 (highest)**
B	**40° contact angle**
Radial internal clearance	**CN – normal**