Deep groove ball bearing MJ3+1/2-C3 NKE

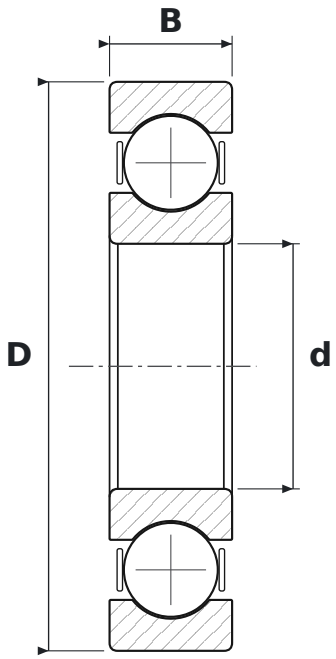

DIMENSIONS

d	bore diameter	**88.9 mm**
D	outside diameter	**206.37 mm**
B	width	**44.45 mm**

SPECIFICATIONS

Manufacturer	**NKE**
Manufacturer designation	**MJ3+1/2-C3**
Rolling elements	**single-row ball bearing**
Radial internal clearance	**CN – normal**