Deep groove ball bearing E2.6209-2Z/C3 SKF

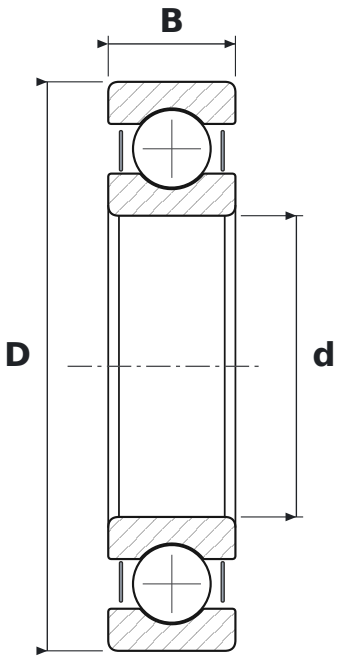

DIMENSIONS

d	bore diameter	**45 mm**
D	outside diameter	**85 mm**
B	width	**19 mm**

SPECIFICATIONS

Manufacturer	**SKF**
Manufacturer designation	**E2.6209-2Z/C3**
Rolling elements	**single-row ball bearing**
2Z	**steel shields, both sides**
C3	**radial clearance greater than normal**
Basic dynamic load rating C	**35.1 kN**
Basic static load rating C0	**21.6 kN**