Deep groove ball bearing F8-16 M ZEN

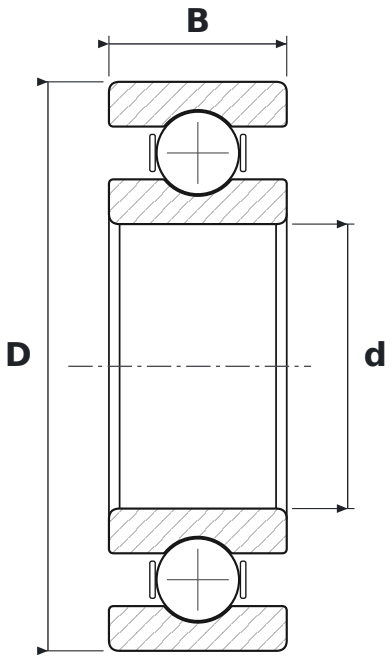

DIMENSIONS

d	bore diameter	**8 mm**
D	outside diameter	**16 mm**
B	width	**5 mm**

SPECIFICATIONS

Manufacturer	**ZEN**
Manufacturer designation	**F8-16 M**
Rolling elements	**single-row ball bearing**
Radial internal clearance	**CN – normal**