Deep groove ball bearing FB61902-2RS ZEN

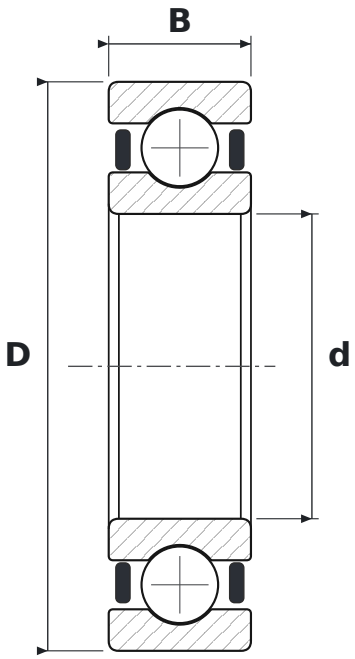

DIMENSIONS

d	bore diameter	**15 mm**
D	outside diameter	**28 mm**
B	width	**7 mm**

SPECIFICATIONS

Manufacturer	**ZEN**
Manufacturer designation	**FB61902-2RS**
Rolling elements	**single-row ball bearing**
2RS	**uszczelnienia stykowe z gumy syntetycznej, dwustronne (od −20 do +110 °C)**
Radial internal clearance	**CN – normal**
Mass	**0.015 kg**