Deep groove ball bearing FR133-2Z ZEN

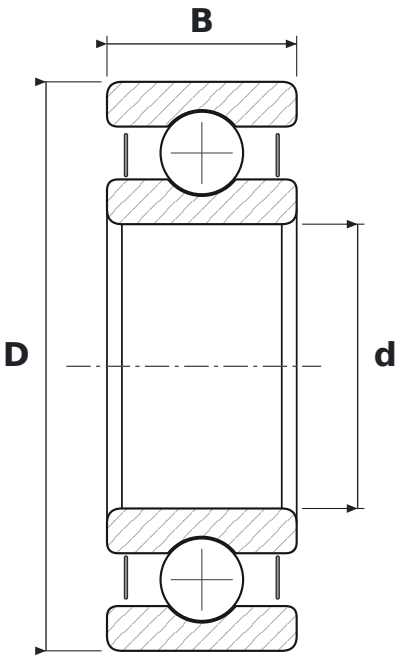

DIMENSIONS

d	bore diameter	**2.38 mm**
D	outside diameter	**4.76 mm**
B	width	**1.59 mm**

SPECIFICATIONS

Manufacturer	**ZEN**
Manufacturer designation	**FR133-2Z**
Rolling elements	**single-row ball bearing**
2Z	**steel shields, both sides**
Radial internal clearance	**CN – normal**
Mass	**0.001 kg**