Deep groove ball bearing LJ3/4 NKE

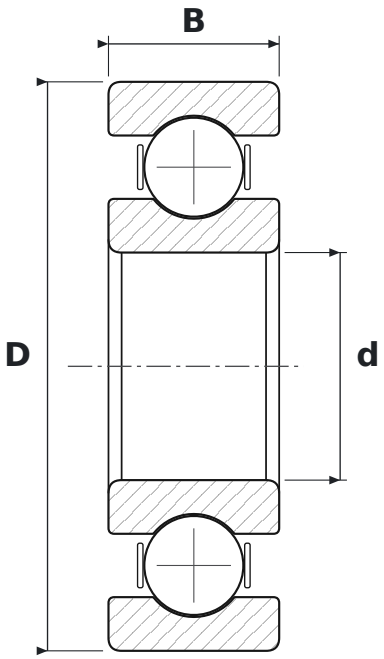

DIMENSIONS

d	bore diameter	**19.05 mm**
D	outside diameter	**47.63 mm**
B	width	**14.29 mm**

SPECIFICATIONS

Manufacturer	**NKE**
Manufacturer designation	**LJ3/4**
Rolling elements	**single-row ball bearing**
Radial internal clearance	**CN – normal**
Mass	**0.111 kg**