Angular contact ball bearing 7203 BE-2RZP SKF

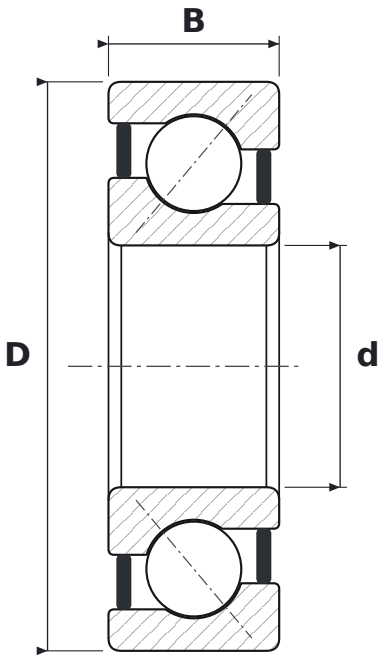

DIMENSIONS

d	bore diameter	**17 mm**
D	outside diameter	**40 mm**
B	width	**12 mm**

WHAT 7203 BE-2RZP MEANS

BE	40° contact angle, reinforced design
2RZ	non-contact rubber seals, both sides
P	koszyk z poliamidu PA66 wzmocnionego włóknem szklanym, prowadzony na elementach tocznych

SPECIFICATIONS

Manufacturer	**SKF**
Manufacturer designation	**7203 BE-2RZP**
Rolling elements	**single-row ball bearing**