Angular contact ball bearing QJ309 MAC2L SKF

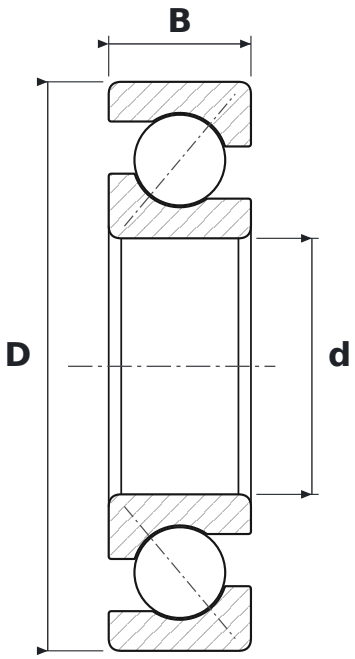

DIMENSIONS

d	bore diameter	**45 mm**
D	outside diameter	**100 mm**
B	width	**25 mm**

SPECIFICATIONS

Manufacturer	**SKF**
Manufacturer designation	**QJ309 MAC2L**
Rolling elements	**single-row ball bearing**
MA	**machined brass cage, outer ring centred**
C2	**luz osiowy mniejszy od normalnego**
Seal	**open – no seals**
Mass	**1.019 kg**