Angular contact ball bearing QJ309-MPA FAG

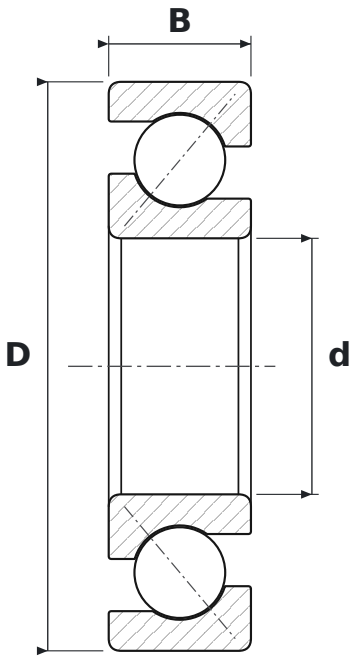

DIMENSIONS

d	bore diameter	**45 mm**
D	outside diameter	**100 mm**
B	width	**25 mm**

SPECIFICATIONS

Manufacturer	**FAG**
Manufacturer designation	**QJ309-MPA**
Rolling elements	**single-row ball bearing**
MPA	**koszyk mosiężny masywny (łożyska czteropunktowe QJ)**
Seal	**open – no seals**
Radial internal clearance	**CN – normal**
Cage	**Brass**
Mass	**1.02 kg**