# Angular contact ball bearing QJ311 MA SKF

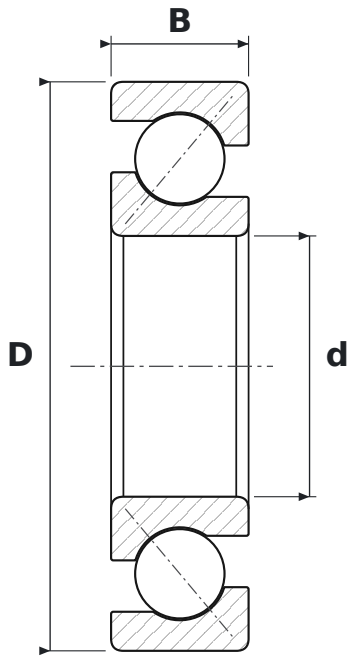


## DIMENSIONS

| | | |
|---|---|---|
| **d** | bore diameter | **55 mm** |
| **D** | outside diameter | **120 mm** |
| **B** | width | **29 mm** |

## SPECIFICATIONS

| | |
|---|---|
| Manufacturer | **SKF** |
| Manufacturer designation | **QJ311 MA** |
| Rolling elements | **single-row ball bearing** |
| MA | **machined brass cage, outer ring centred** |
| Seal | **open – no seals** |
| Radial internal clearance | **CN – normal** |
| Mass | **1.69 kg** |