Deep groove ball bearing RLS10-2RS1 SKF

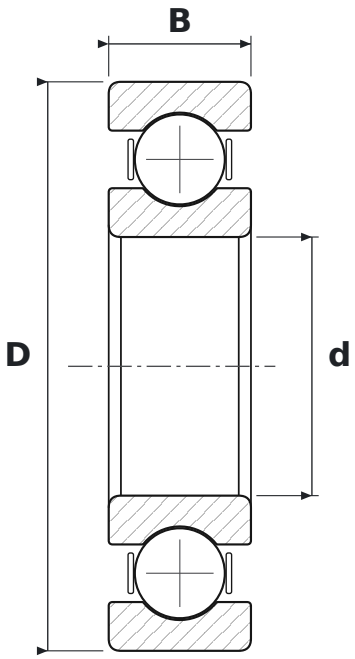

DIMENSIONS

d	bore diameter	**31.75 mm**
D	outside diameter	**69.85 mm**
B	width	**17.46 mm**

SPECIFICATIONS

Manufacturer	**SKF**
Manufacturer designation	**RLS10-2RS1**
Rolling elements	**single-row ball bearing**
Radial internal clearance	**CN – normal**
Mass	**0.294 kg**