Deep groove ball bearing RLS12-2Z ZEN

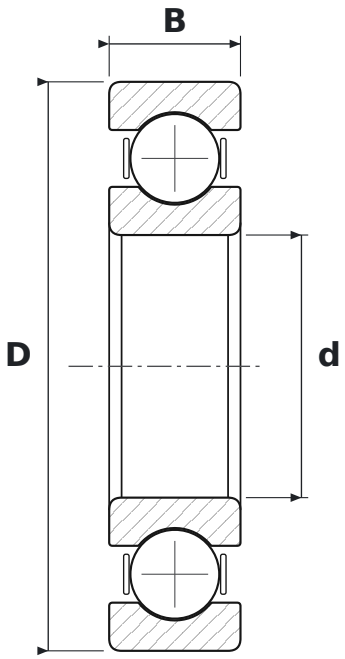

DIMENSIONS

d	bore diameter	**38.1 mm**
D	outside diameter	**82.55 mm**
B	width	**19.05 mm**

SPECIFICATIONS

Manufacturer	**ZEN**
Manufacturer designation	**RLS12-2Z**
Rolling elements	**single-row ball bearing**
Radial internal clearance	**CN – normal**