Angular contact ball bearing S3207 B2RS ZEN

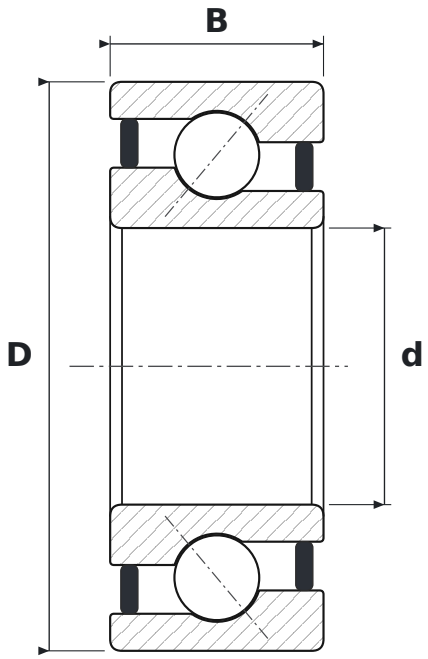

DIMENSIONS

d	bore diameter	**35 mm**
D	outside diameter	**72 mm**
B	width	**27 mm**

SPECIFICATIONS

Manufacturer	**ZEN**
Manufacturer designation	**S3207 B2RS**
Rolling elements	**double-row ball bearing**
B	**40° contact angle**
2RS	**uszczelnienia stykowe z gumy syntetycznej, dwustronne (od −20 do +110 °C)**
Radial internal clearance	**CN – normal**
Features	**Stainless steel**
Mass	**0.484 kg**