# Angular contact ball bearing S3210 B2RS ZEN

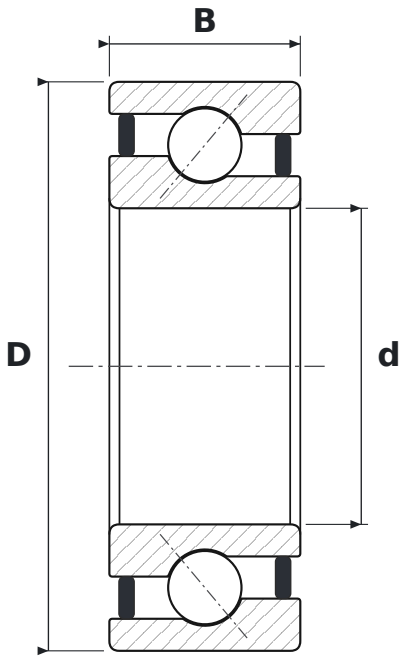


## DIMENSIONS

| | | |
|---|---|---|
| **d** | bore diameter | **50 mm** |
| **D** | outside diameter | **90 mm** |
| **B** | width | **30.2 mm** |

## SPECIFICATIONS

| | |
|---|---|
| Manufacturer | **ZEN** |
| Manufacturer designation | **S3210 B2RS** |
| Rolling elements | **double-row ball bearing** |
| B | **40° contact angle** |
| 2RS | **uszczelnienia stykowe z gumy syntetycznej, dwustronne (od −20 do +110 °C)** |
| Radial internal clearance | **CN – normal** |
| Features | **Stainless steel** |
| Mass | **0.764 kg** |