Deep groove ball bearing S6002-2RSNR ZEN

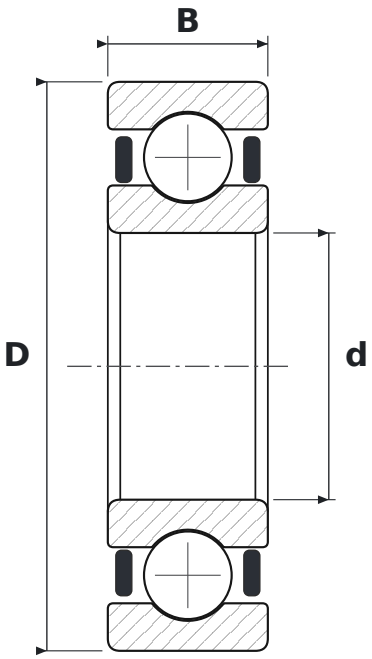

DIMENSIONS

d	bore diameter	**15 mm**
D	outside diameter	**32 mm**
B	width	**9 mm**

SPECIFICATIONS

Manufacturer	**ZEN**
Manufacturer designation	**S6002-2RSNR**
Rolling elements	**single-row ball bearing**
2RS	**uszczelnienia stykowe z gumy syntetycznej, dwustronne (od −20 do +110 °C)**
NR	**snap ring groove with snap ring**
Radial internal clearance	**CN – normal**
Features	**Stainless steel**
Mass	**0.03 kg**