Deep groove ball bearing S6005 ZEN

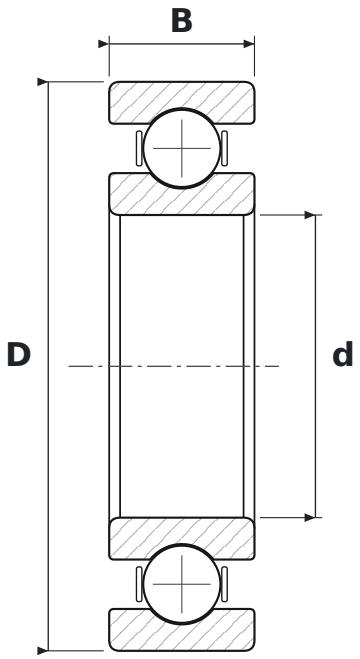

DIMENSIONS

d	bore diameter	**25 mm**
D	outside diameter	**47 mm**
B	width	**12 mm**

SPECIFICATIONS

Manufacturer	**ZEN**
Manufacturer designation	**S6005**
Rolling elements	**single-row ball bearing**
Seal	**open – no seals**
Radial internal clearance	**CN – normal**
Features	**Stainless steel**
Mass	**0.08 kg**