CASTOMER

DATASHEET

Deep groove ball bearing S61903-2Z ZEN

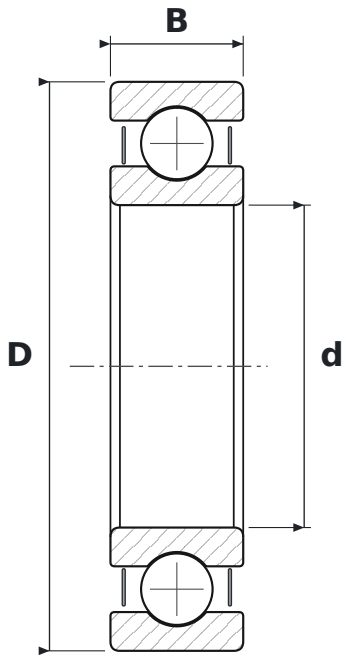

DIMENSIONS

d	bore diameter	**17 mm**
D	outside diameter	**30 mm**
B	width	**7 mm**

SPECIFICATIONS

Manufacturer	**ZEN**
Manufacturer designation	**S61903-2Z**
Rolling elements	**single-row ball bearing**
2Z	**steel shields, both sides**
Radial internal clearance	**CN – normal**
Features	**Stainless steel**
Mass	**0.01 kg**