Deep groove ball bearing S686-2ZW4.5 ZEN

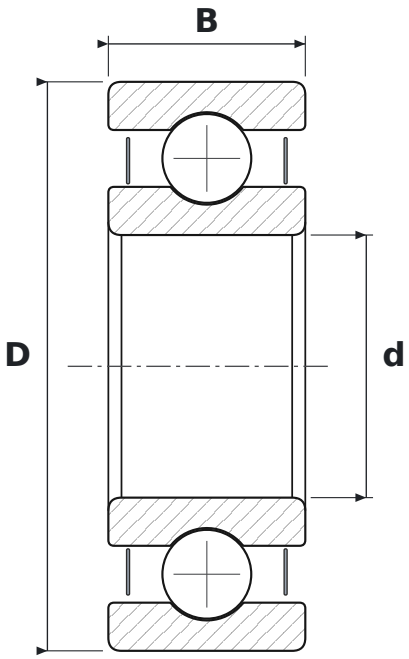

DIMENSIONS

d	bore diameter	**6 mm**
D	outside diameter	**13 mm**
B	width	**4.5 mm**

SPECIFICATIONS

Manufacturer	**ZEN**
Manufacturer designation	**S686-2ZW4.5**
Rolling elements	**single-row ball bearing**
2Z	**steel shields, both sides**
Radial internal clearance	**CN – normal**
Features	**Stainless steel**