# Deep groove ball bearing SF697-2Z ZEN

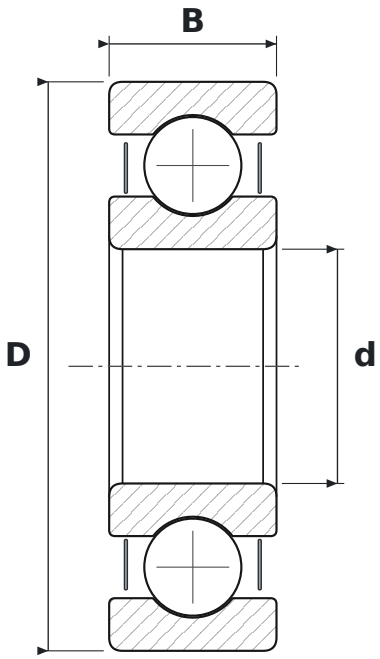


## DIMENSIONS

| | | |
|---|---|---|
| **d** | bore diameter | **7 mm** |
| **D** | outside diameter | **17 mm** |
| **B** | width | **5 mm** |

## SPECIFICATIONS

| | |
|---|---|
| Manufacturer | **ZEN** |
| Manufacturer designation | **SF697-2Z** |
| Rolling elements | **single-row ball bearing** |
| 2Z | **steel shields, both sides** |
| Radial internal clearance | **CN – normal** |
| Mass | **0.006 kg** |