Deep groove ball bearing SR188 ZEN

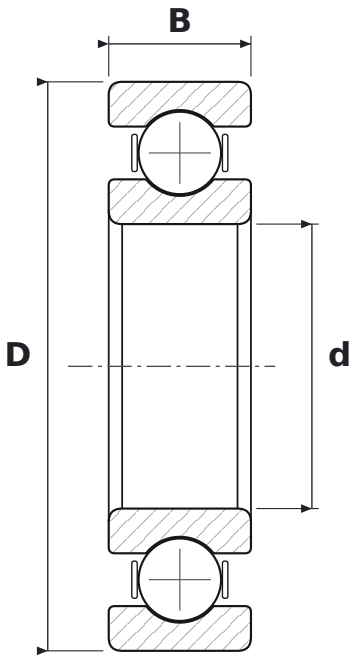

DIMENSIONS

d	bore diameter	**6.35 mm**
D	outside diameter	**12.7 mm**
B	width	**3.18 mm**

SPECIFICATIONS

Manufacturer	**ZEN**
Manufacturer designation	**SR188**
Rolling elements	**single-row ball bearing**
Seal	**open – no seals**
Radial internal clearance	**CN – normal**