Deep groove ball bearing W6003-2Z SKF

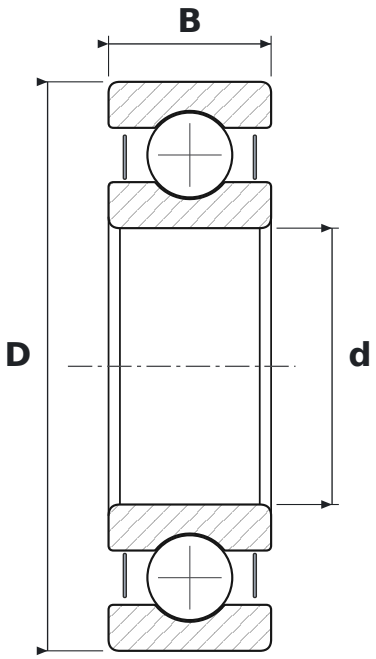

DIMENSIONS

d	bore diameter	**17 mm**
D	outside diameter	**35 mm**
B	width	**10 mm**

SPECIFICATIONS

Manufacturer	**SKF**
Manufacturer designation	**W6003-2Z**
Rolling elements	**single-row ball bearing**
2Z	**steel shields, both sides**
Radial internal clearance	**CN – normal**
Features	**Stainless steel**
Basic dynamic load rating C	**6.37 kN**
Basic static load rating C0	**3.25 kN**
Mass	**0.04 kg**