CASTOMER

DATASHEET

Deep groove ball bearing W6006-2RS1/VP311 SKF

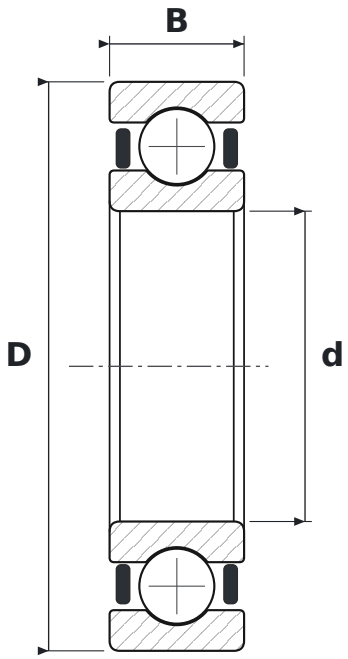

DIMENSIONS

d	bore diameter	**30 mm**
D	outside diameter	**55 mm**
B	width	**13 mm**

SPECIFICATIONS

Manufacturer	**SKF**
Manufacturer designation	**W6006-2RS1/VP311**
Rolling elements	**single-row ball bearing**
2RS	**contact rubber seals, both sides**
Radial internal clearance	**CN – normal**
Features	**Stainless steel**
Basic dynamic load rating C	**13.8 kN**
Basic static load rating C0	**8.3 kN**