CASTOMER

DATASHEET

Deep groove ball bearing W6210-2RS1 SKF

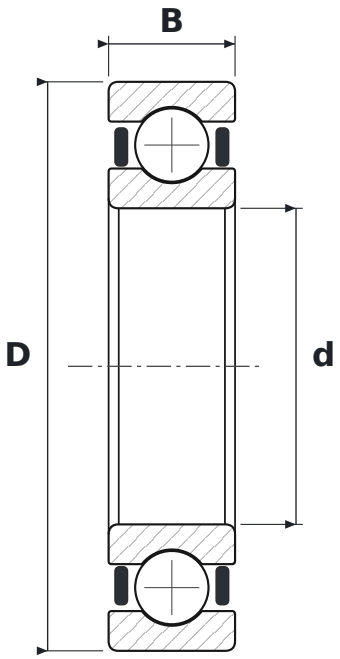

DIMENSIONS

d	bore diameter	**50 mm**
D	outside diameter	**90 mm**
B	width	**20 mm**

SPECIFICATIONS

Manufacturer	**SKF**
Manufacturer designation	**W6210-2RS1**
Rolling elements	**single-row ball bearing**
2RS	**contact rubber seals, both sides**
Radial internal clearance	**CN – normal**
Features	**Stainless steel**
Basic dynamic load rating C	**37.1 kN**
Basic static load rating C0	**23.2 kN**
Mass	**0.458 kg**