Deep groove ball bearing W6300-2RS1 SKF

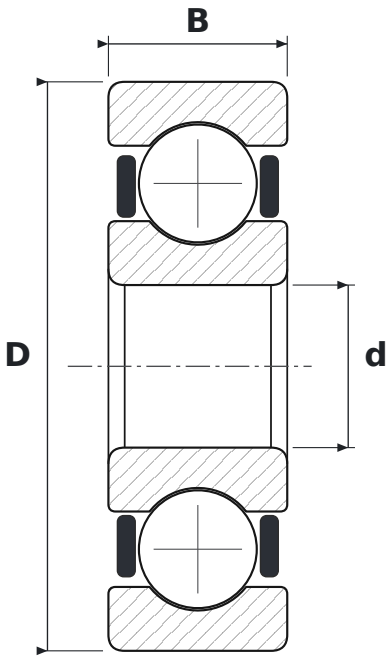

DIMENSIONS

d	bore diameter	**10 mm**
D	outside diameter	**35 mm**
B	width	**11 mm**

SPECIFICATIONS

Manufacturer	**SKF**
Manufacturer designation	**W6300-2RS1**
Rolling elements	**single-row ball bearing**
2RS	**contact rubber seals, both sides**
Radial internal clearance	**CN – normal**
Features	**Stainless steel**
Basic dynamic load rating C	**8.52 kN**
Basic static load rating C0	**3.4 kN**
Mass	**0.051 kg**