Ball screw support bearing ZKLF100200-2Z INA

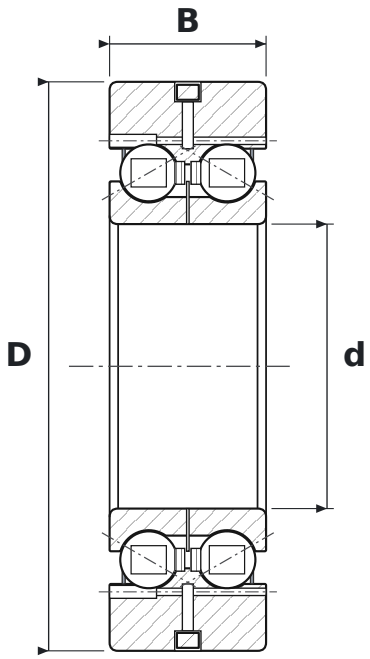

DIMENSIONS

d	bore diameter	**100 mm**
D	outside diameter	**200 mm**
B	width	**55 mm**
J	flange bolt circle diameter	**10.5 mm**
d1	bolt hole diameter	**2.6 mm**

SPECIFICATIONS

Manufacturer	**INA**
Manufacturer designation	**ZKLF100200-2Z**
Flange bolt holes (qty)	**8**
Rolling elements	**double-row ball bearing**
Contact angle	**60°**
2Z	**steel shields, both sides**
Radial internal clearance	**CN – normal**
Features	**flange**
Basic dynamic load rating C	**140 kN**
Basic static load rating C0	**435 kN**
Limiting speed	**1,700 r/min**
Mass	**9.3 kg**