Ball screw support bearing ZKLF1255-2Z INA

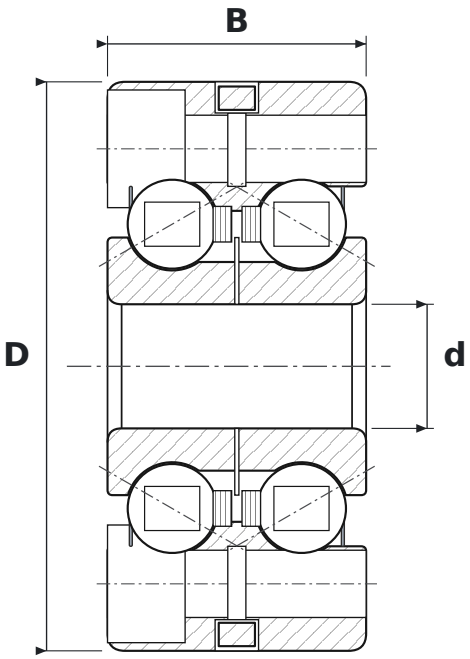

DIMENSIONS

d	bore diameter	**12 mm**
D	outside diameter	**55 mm**
B	width	**25 mm**
J	flange bolt circle diameter	**42 mm**
d1	bolt hole diameter	**6.5 mm**

SPECIFICATIONS

Manufacturer	**INA**
Manufacturer designation	**ZKLF1255-2Z**
Flange bolt holes (qty)	**3**
Rolling elements	**double-row ball bearing**
Contact angle	**60°**
2Z	**steel shields, both sides**
Radial internal clearance	**CN – normal**
Features	**flange**
Catalogue designation	**ZKLF12552RSPE**
Basic dynamic load rating C	**17 kN**
Basic static load rating C0	**24.7 kN**
Limiting speed	**3,800 r/min**
Mass	**0.37 kg**