# Ball screw support bearing ZKLF2575-ZZ INA

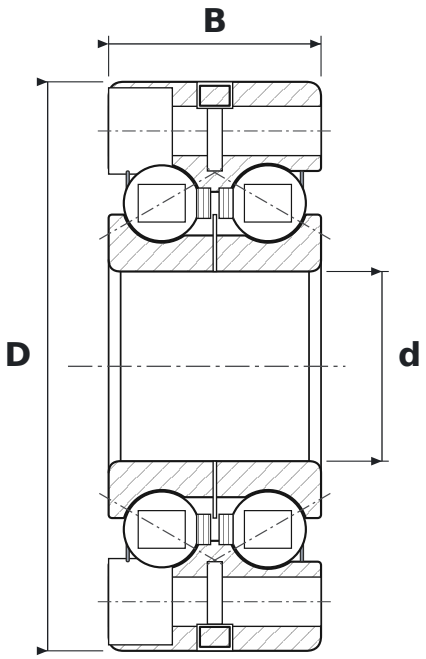


## DIMENSIONS

| | | |
|---|---|---|
| **d** | bore diameter | **25 mm** |
| **D** | outside diameter | **75 mm** |
| **B** | width | **28 mm** |
| **J** | flange bolt circle diameter | **58 mm** |
| **d1** | bolt hole diameter | **6.5 mm** |

## SPECIFICATIONS

| | |
|---|---|
| Manufacturer | **INA** |
| Manufacturer designation | **ZKLF2575-ZZ** |
| Flange bolt holes (qty) | **4** |
| Rolling elements | **double-row ball bearing** |
| Contact angle | **60°** |
| 2Z | **steel shields, both sides** |
| Radial internal clearance | **CN – normal** |
| Features | **flange** |
| Catalogue designation | **ZKLF25752RSPE** |
| Basic dynamic load rating C | **27.5 kN** |
| Basic static load rating C0 | **55 kN** |
| Limiting speed | **2,600 r/min** |
| Mass | **0.714 kg** |