Ball screw support bearing ZKLF30100-2ZPE INA

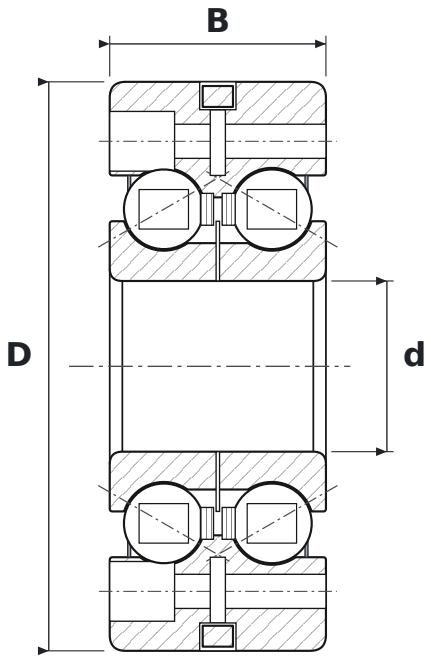

DIMENSIONS

d	bore diameter	**30 mm**
D	outside diameter	**100 mm**
B	width	**38 mm**

SPECIFICATIONS

Manufacturer	**INA**
Manufacturer designation	**ZKLF30100-2ZPE**
Rolling elements	**double-row ball bearing**
Contact angle	**60°**
2Z	**steel shields, both sides**
E	**reinforced design, higher load rating**
Radial internal clearance	**CN – normal**
Features	**flange**
Mass	**1.63 kg**