Ball screw support bearing ZKLF3080-2RS INA

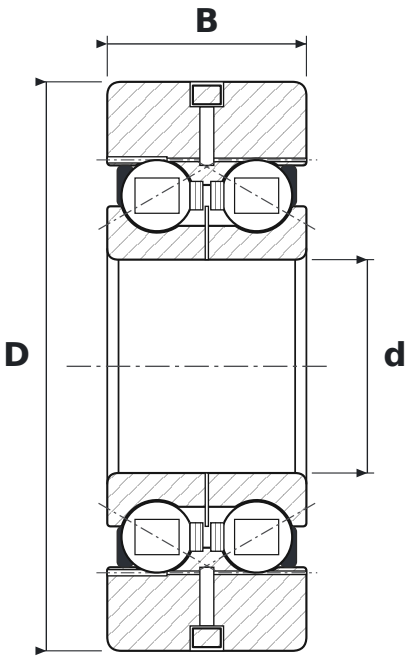

DIMENSIONS

d	bore diameter	**30 mm**
D	outside diameter	**80 mm**
B	width	**28 mm**
J	flange bolt circle diameter	**6.5 mm**
d1	bolt hole diameter	**0.5 mm**

SPECIFICATIONS

Manufacturer	**INA**
Manufacturer designation	**ZKLF3080-2RS**
Flange bolt holes (qty)	**6**
Rolling elements	**double-row ball bearing**
Contact angle	**60°**
2RS	**contact rubber seals, both sides**
Radial internal clearance	**CN – normal**
Features	**flange**
Basic dynamic load rating C	**29 kN**
Basic static load rating C0	**64 kN**
Limiting speed	**2,200 r/min**
Mass	**0.78 kg**