Ball screw support bearing ZKLF40100-ZZ INA

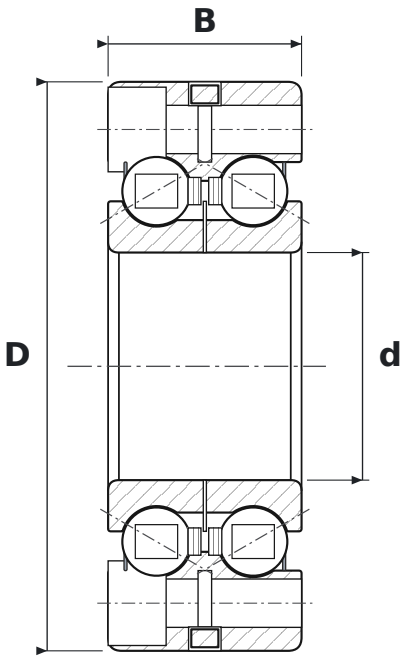

DIMENSIONS

d	bore diameter	**40 mm**
D	outside diameter	**100 mm**
B	width	**34 mm**
J	flange bolt circle diameter	**80 mm**
d1	bolt hole diameter	**8.5 mm**

SPECIFICATIONS

Manufacturer	**INA**
Manufacturer designation	**ZKLF40100-ZZ**
Flange bolt holes (qty)	**4**
Rolling elements	**double-row ball bearing**
Contact angle	**60°**
2Z	**steel shields, both sides**
Radial internal clearance	**CN – normal**
Features	**flange**
Catalogue designation	**ZKLF401002RSPE**
Basic dynamic load rating C	**43 kN**
Basic static load rating C0	**101 kN**
Limiting speed	**1,800 r/min**