CASTOMER

DATASHEET

Ball screw support bearing ZKLF50115-2RS INA

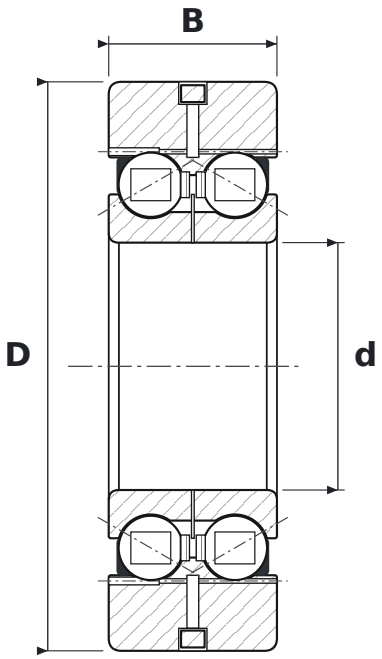

DIMENSIONS

d	bore diameter	**50 mm**
D	outside diameter	**115 mm**
B	width	**34 mm**
J	flange bolt circle diameter	**8.5 mm**
d1	bolt hole diameter	**0.9 mm**

SPECIFICATIONS

Manufacturer	**INA**
Manufacturer designation	**ZKLF50115-2RS**
Flange bolt holes (qty)	**6**
Rolling elements	**double-row ball bearing**
Contact angle	**60°**
2RS	**contact rubber seals, both sides**
Radial internal clearance	**CN – normal**
Features	**flange**
Basic dynamic load rating C	**46.5 kN**
Basic static load rating C0	**126 kN**
Limiting speed	**1,500 r/min**
Mass	**1.86 kg**