Ball screw support bearing ZKLF50140-2Z INA

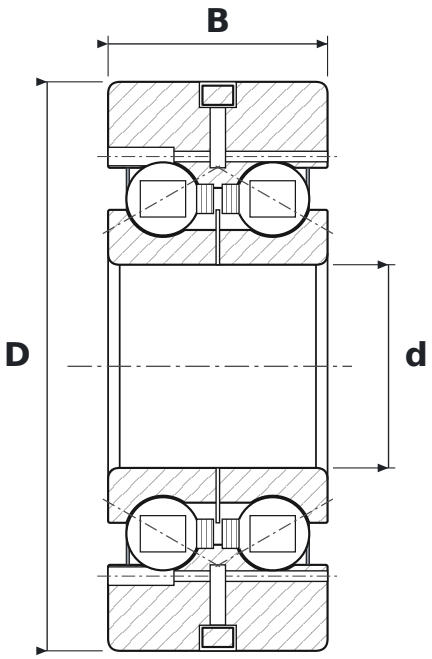

DIMENSIONS

d	bore diameter	**50 mm**
D	outside diameter	**140 mm**
B	width	**54 mm**
J	flange bolt circle diameter	**10.5 mm**
d1	bolt hole diameter	**2.6 mm**

SPECIFICATIONS

Manufacturer	**INA**
Manufacturer designation	**ZKLF50140-2Z**
Rolling elements	**double-row ball bearing**
Contact angle	**60°**
2Z	**steel shields, both sides**
Radial internal clearance	**CN – normal**
Features	**flange**
Catalogue designation	**ZKLF501402RS**
Basic dynamic load rating C	**113 kN**
Basic static load rating C0	**250 kN**
Limiting speed	**2,500 r/min**
Mass	**4.7 kg**