Ball screw support bearing ZKLFA1263-2RS INA

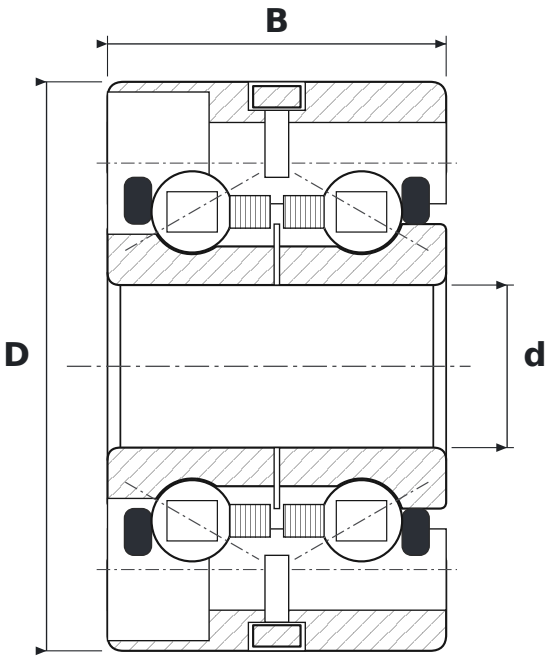

DIMENSIONS

d	bore diameter	**12 mm**
D	outside diameter	**42 mm**
B	width	**25 mm**

SPECIFICATIONS

Manufacturer	**INA**
Manufacturer designation	**ZKLFA1263-2RS**
Rolling elements	**double-row ball bearing**
Contact angle	**60°**
2RS	**contact rubber seals, both sides**
Radial internal clearance	**CN – normal**
Features	**flange**
Mass	**0.295 kg**