Ball screw support bearing ZKLN1242-2RS INA

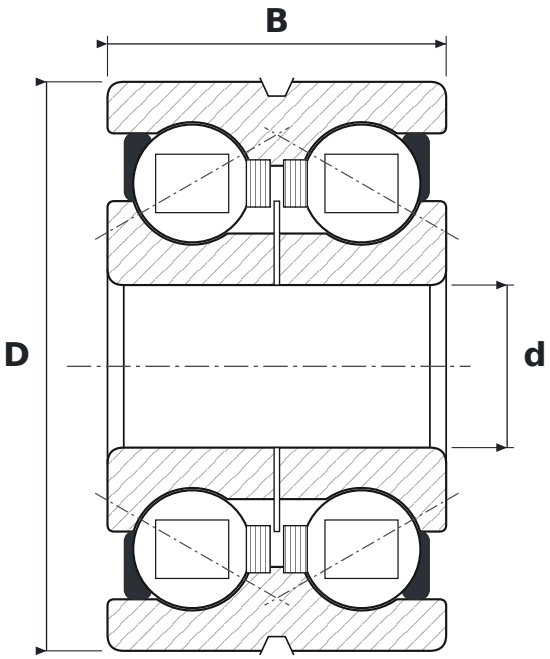

DIMENSIONS

d	bore diameter	**12 mm**
D	outside diameter	**42 mm**
B	width	**25 mm**

SPECIFICATIONS

Manufacturer	**INA**
Manufacturer designation	**ZKLN1242-2RS**
Rolling elements	**double-row ball bearing**
Contact angle	**60°**
2RS	**contact rubber seals, both sides**
Radial internal clearance	**CN – normal**
Basic dynamic load rating C	**17 kN**
Basic static load rating C0	**24.7 kN**
Limiting speed	**3,800 r/min**
Mass	**0.2 kg**