Ball screw support bearing ZKLN1545-ZZ INA

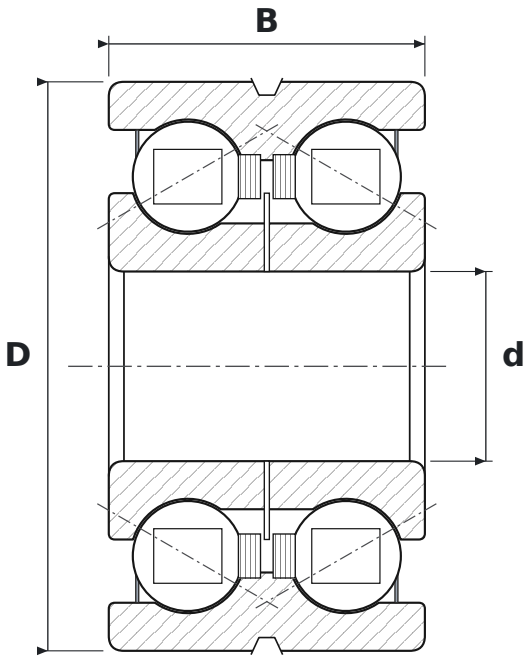

DIMENSIONS

d	bore diameter	**15 mm**
D	outside diameter	**45 mm**
B	width	**25 mm**

SPECIFICATIONS

Manufacturer	**INA**
Manufacturer designation	**ZKLN1545-ZZ**
Rolling elements	**double-row ball bearing**
Contact angle	**60°**
2Z	**steel shields, both sides**
Radial internal clearance	**CN – normal**
Catalogue designation	**ZKLN15452RSPE**
Basic dynamic load rating C	**17.9 kN**
Basic static load rating C0	**28 kN**
Limiting speed	**3,500 r/min**
Mass	**0.233 kg**