Ball screw support bearing ZKLN2052 .2RS UKF

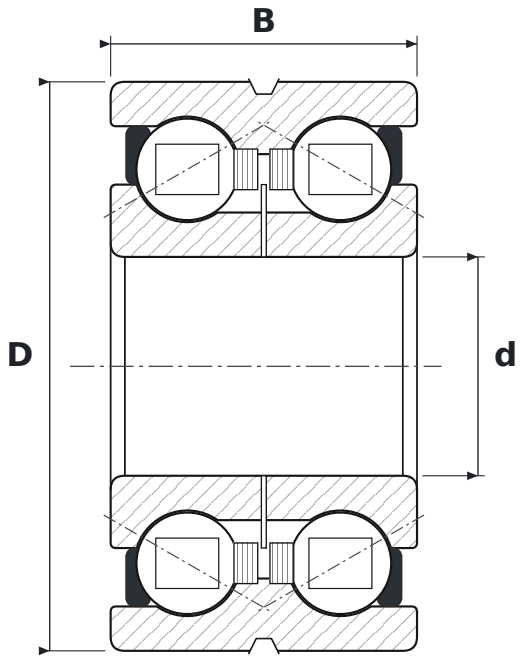

DIMENSIONS

d	bore diameter	**20 mm**
D	outside diameter	**52 mm**
B	width	**28 mm**

SPECIFICATIONS

Manufacturer	**UKF**
Manufacturer designation	**ZKLN2052 .2RS**
Rolling elements	**double-row ball bearing**
Contact angle	**60°**
2RS	**contact rubber seals, both sides**
Radial internal clearance	**CN – normal**
Features	**Heavy preload (S)**
Basic dynamic load rating C	**26 kN**
Basic static load rating C0	**47 kN**
Limiting speed	**3,000 r/min**