Ball screw support bearing ZKLN2557-2RS INA

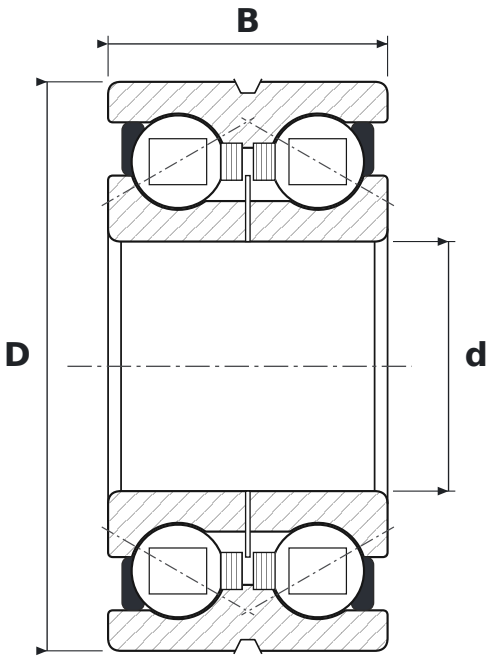

DIMENSIONS

d	bore diameter	**25 mm**
D	outside diameter	**57 mm**
B	width	**28 mm**

SPECIFICATIONS

Manufacturer	**INA**
Manufacturer designation	**ZKLN2557-2RS**
Rolling elements	**double-row ball bearing**
Contact angle	**60°**
2RS	**contact rubber seals, both sides**
Radial internal clearance	**CN – normal**
Basic dynamic load rating C	**27.5 kN**
Basic static load rating C0	**55 kN**
Limiting speed	**2,600 r/min**
Mass	**0.34 kg**