Ball screw support bearing ZKLN3072-2Z INA

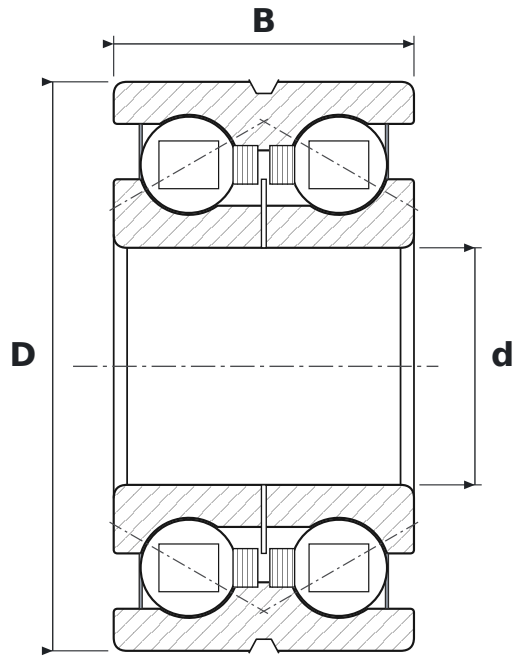

DIMENSIONS

d	bore diameter	**30 mm**
D	outside diameter	**72 mm**
B	width	**38 mm**

SPECIFICATIONS

Manufacturer	**INA**
Manufacturer designation	**ZKLN3072-2Z**
Rolling elements	**double-row ball bearing**
Contact angle	**60°**
2Z	**steel shields, both sides**
Radial internal clearance	**CN – normal**
Catalogue designation	**ZKLN30722RS**
Basic dynamic load rating C	**59 kN**
Basic static load rating C0	**108 kN**
Limiting speed	**2,100 r/min**
Mass	**0.756 kg**