Ball screw support bearing ZKLN50110-2RS INA

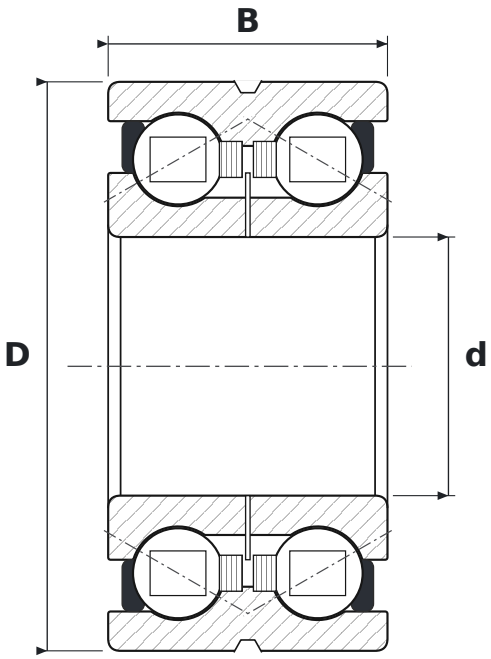

DIMENSIONS

d	bore diameter	**50 mm**
D	outside diameter	**110 mm**
B	width	**54 mm**

SPECIFICATIONS

Manufacturer	**INA**
Manufacturer designation	**ZKLN50110-2RS**
Rolling elements	**double-row ball bearing**
Contact angle	**60°**
2RS	**contact rubber seals, both sides**
Radial internal clearance	**CN – normal**
Basic dynamic load rating C	**113.5 kN**
Basic static load rating C0	**250 kN**
Limiting speed	**2,500 r/min**