Ball screw support bearing ZKLR0624-2Z INA

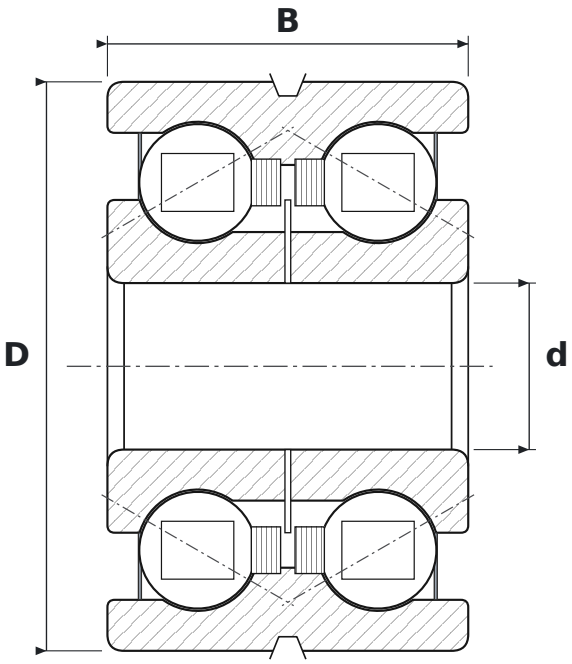

DIMENSIONS

d	bore diameter	**6 mm**
D	outside diameter	**20.5 mm**
B	width	**13 mm**

SPECIFICATIONS

Manufacturer	**INA**
Manufacturer designation	**ZKLR0624-2Z**
Rolling elements	**double-row ball bearing**
Contact angle	**60°**
2Z	**steel shields, both sides**
Radial internal clearance	**CN – normal**