Linear carriage HRW-21 THK

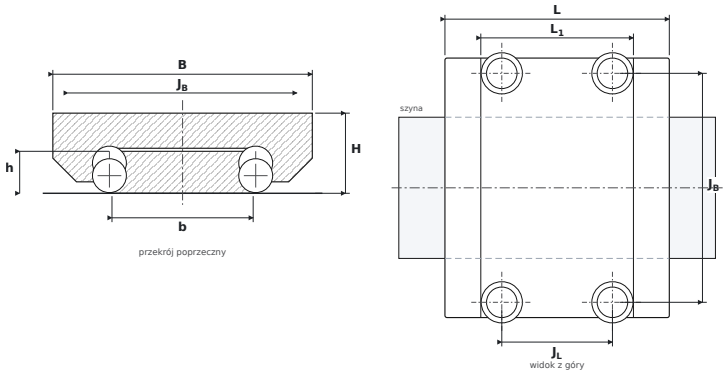

DIMENSIONS

B	carriage width	**68 mm**
H	overall height (carriage on rail)	**21 mm**
L	overall carriage length	**58.8 mm**
L1	body length (without end seals)	**40 mm**
JB	mounting hole spacing — across	**60 mm**
JL	corner hole spacing — along	**29 mm**
b	rail width	**37 mm**
h	rail height	**11 mm**

SPECIFICATIONS

Manufacturer	**THK**
Manufacturer designation	**HRW-21**
Basic dynamic load rating C	**6.18 kN**
Basic static load rating C0	**11.5 kN**
Mass	**0.25 kg**