Linear carriage HSR-15 THK

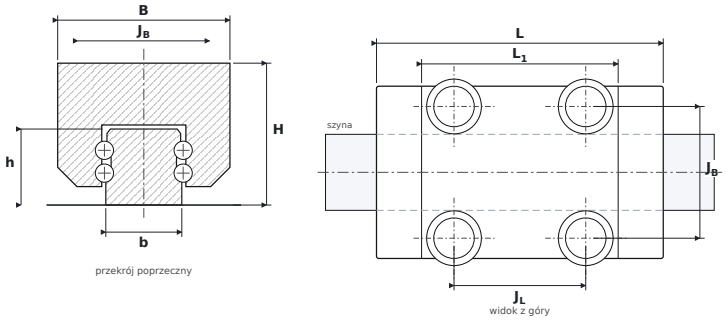

DIMENSIONS

B	carriage width	**34 mm**
H	overall height (carriage on rail)	**28 mm**
L	overall carriage length	**56.6 mm**
L1	body length (without end seals)	**38.8 mm**
JB	mounting hole spacing — across	**26 mm**
JL	corner hole spacing — along	**26 mm**
b	rail width	**15 mm**
h	rail height	**15 mm**

SPECIFICATIONS

Manufacturer	**THK**
Manufacturer designation	**HSR-15**
Basic dynamic load rating C	**8.33 kN**
Basic static load rating C0	**13.5 kN**
Mass	**0.18 kg**