Linear carriage HSR-30 THK

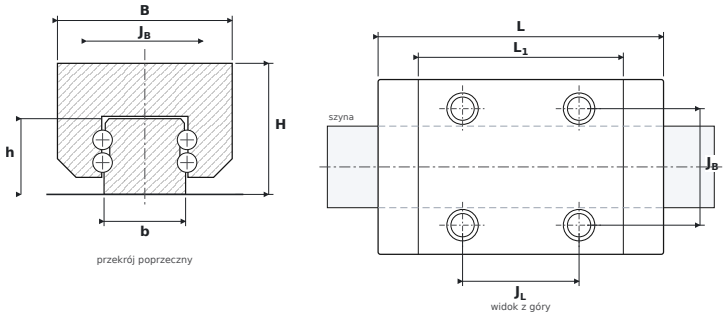

DIMENSIONS

B	carriage width	**60 mm**
H	overall height (carriage on rail)	**45 mm**
L	overall carriage length	**98 mm**
L1	body length (without end seals)	**70.4 mm**
JB	mounting hole spacing — across	**40 mm**
JL	corner hole spacing — along	**40 mm**
b	rail width	**28 mm**
h	rail height	**26 mm**

SPECIFICATIONS

Manufacturer	**THK**
Manufacturer designation	**HSR-30**
Basic dynamic load rating C	**28 kN**
Basic static load rating C0	**46.8 kN**
Mass	**0.9 kg**