Linear carriage HSR-35 THK

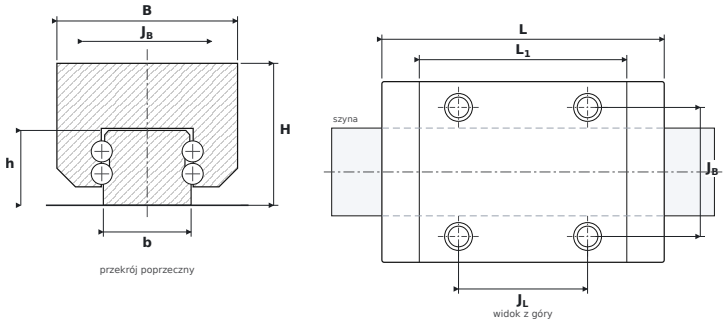

DIMENSIONS

B	carriage width	**70 mm**
H	overall height (carriage on rail)	**55 mm**
L	overall carriage length	**109.4 mm**
L1	body length (without end seals)	**80.4 mm**
JB	mounting hole spacing — across	**50 mm**
JL	corner hole spacing — along	**50 mm**
b	rail width	**34 mm**
h	rail height	**29 mm**

SPECIFICATIONS

Manufacturer	**THK**
Manufacturer designation	**HSR-35**
Basic dynamic load rating C	**37.3 kN**
Basic static load rating C0	**61.1 kN**
Mass	**1.5 kg**