Linear carriage SHS-20 THK

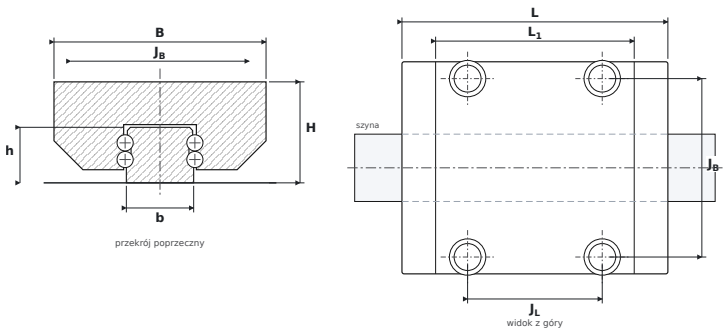

DIMENSIONS

B	carriage width	**63 mm**
H	overall height (carriage on rail)	**30 mm**
L	overall carriage length	**79 mm**
L1	body length (without end seals)	**59 mm**
JB	mounting hole spacing — across	**53 mm**
JL	corner hole spacing — along	**40 mm**
b	rail width	**20 mm**
h	rail height	**16.5 mm**

SPECIFICATIONS

Manufacturer	**THK**
Manufacturer designation	**SHS-20**
Basic dynamic load rating C	**22.3 kN**
Basic static load rating C0	**38.4 kN**
Mass	**0.46 kg**